THE NATIONAL INSTITUTE OF ENGINEERING

Visveswaraya Technological University

Mysuru – 570 008

Project Report

Course : Linear Integrated Circuit

Topic: OpAmp

Semester: IV

Submitted By :

Anusha A -4NI24EC017

Section : C

Submitted To :

Prof. Remya Jayachandran

Assistant Professor
ECE Department
Department of Electronics and Communication Engineering

The National Institute of Engineering

(Autonomous Institute under VTU, Belagavi) Mysuru – 570 008

Aim:

To study and measure the characteristics and parameters of an Op-amp (IC-741):

(a) Input bias current at inverting terminal
(b) Input bias current at non-inverting terminal
(c) Input offset current
(d) Input offset voltage
(e) Slew rate

Theory:

The operational amplifier is a versatile device that can be used to amplify dc as well as ac input signals and was originally designed for performing mathematical operations such as addition, subtraction, multiplication and integration. Thus, the word operational amplifier stems for its original use for these mathematical operations and is abbreviated to op-amp. With the addition of suitable external feedback components, the modern day op-amp can be used for a variety of applications, such as ac and dc signal amplification, active filters, oscillators, comparators, regulators and others.

Since an op-amp is a multistage amplifier, it can be represented by a block diagram as shown:

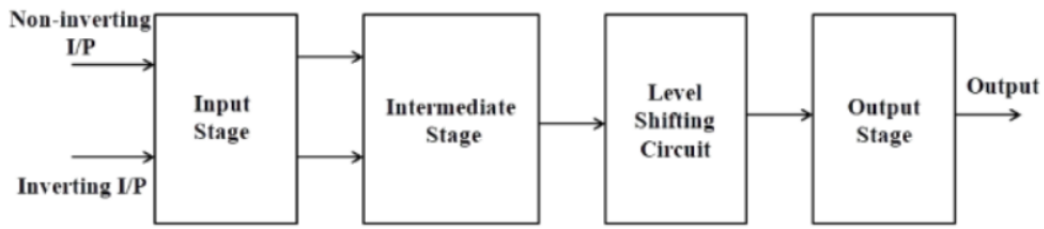

Fig-1: Block diagram of op-amp

The input stage is the dual input, balanced-output differential amplifier. This stage generally provides most of the voltage gain of an amplifier and also establishes the input resistance of the op-amp. The intermediate stage is usually another differential amplifier, which is driven by the output of the first stage. The final stage is usually a push-pull complementary amplifier output stage. The output stage increases the output voltage swing and raises the current supplying capability of the op-amp. A well-designed output stage also provides low output resistance.

the schematic symbol of an op-amp

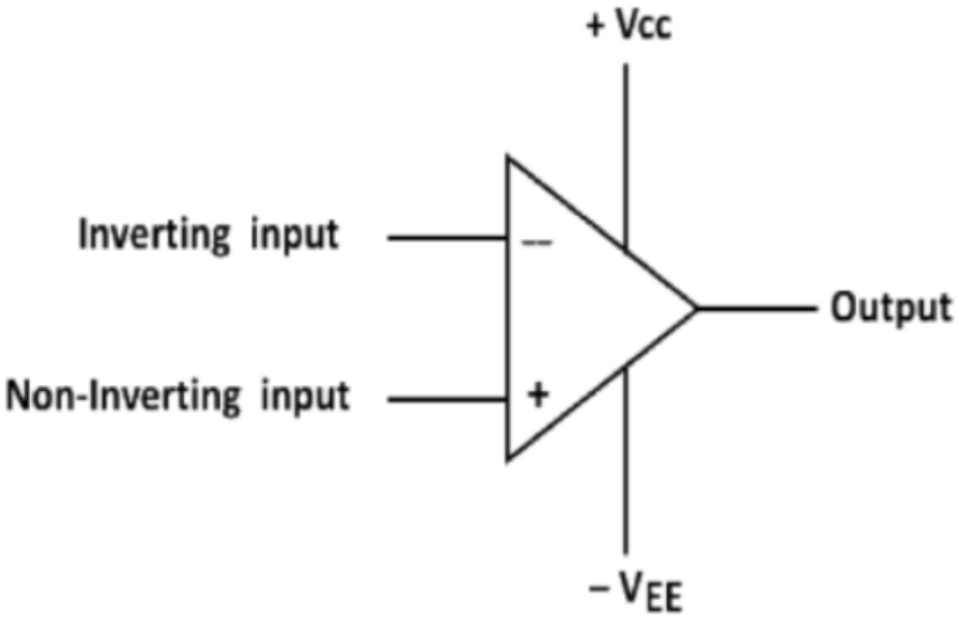

The input differential amplifier stage of the op-amp is designed to be operated in the differential mode; the differential inputs are designated by the (+) and (-) notations. The (+) input is the non-inverting input. An ac signal (or dc voltage) applied to this input produces an in-phase (or same polarity) signal at the output. On the other hand, the (-) input is the inverting input because an ac signal (or dc voltage) applied to this input produces a 180° out of phase (or opposite polarity) signal at the output.

<u>Op-amp IC-741 pin configuration:</u>

The pin configuration of IC-741 general purpose operational amplifier is shown in Fig. 6. The reference point of the chip is the notch at the top. The pins are numbered in a counter clockwise direction, starting at the notch.

➢ Pin 1 and Pin 5 are offset null pins. Offset null is a calibration feature of the op-amp. The op-amp is so sensitive to the input voltage that at times, the output will generate a signal even when there is no intentional input. To avoid this condition for certain applications, offset null pins are provided. They are usually connected to a variable resistance such as a potentiometer. The potentiometer can be adjusted to produce a zero-output voltage from Pin 6.

➢ Pin 2 and Pin 3 are two input pins. Both inputs, pin 2 and pin 3, **generate an** output at Pin 6, but they generate opposite polarities. Pin 2 is the inverting input. Any signal applied to Pin 2 generates a signal of opposite polarity at the output. The non-inverting input, Pin 3, generates an output of the same polarity at Pin 6.

➢ Power to the op-amp is provided through Pin 4 and Pin 7. Pin 4 is either connected to ground or a negative voltage value from 3 to 18 volts. Pin 7 is connected to the positive voltage of the power supply.

➢ The output of the amplifier is at Pin 6.

➢ Pin 8 is not used. 'NC' stands for no connection.

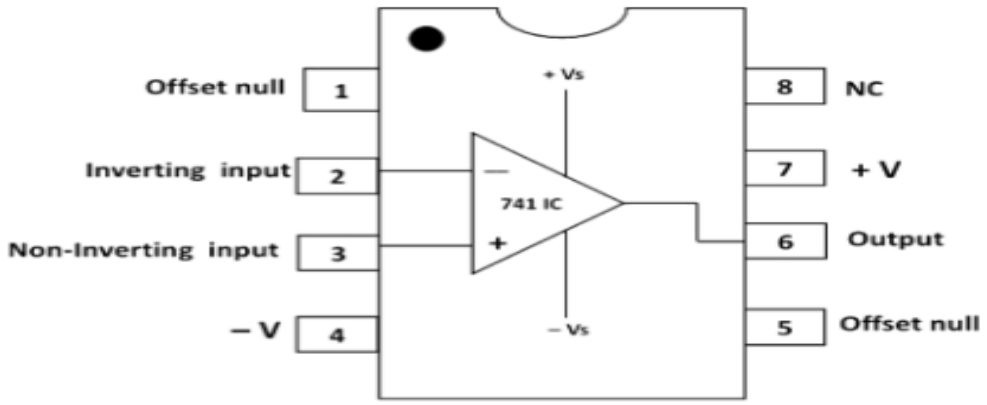

Fig-6: Pin diagram of op-amp IC-741

Measurement Inverting bias current:

Circuit Diagram:

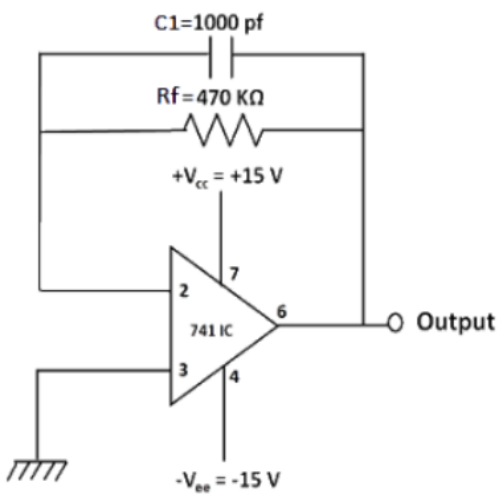

Fig. 1 Circuit Diagram

STEPS:

- Click on the components button to place the component on the table.
- Make connections as per the circuit diagram.
- Click on 'Check Connection' button to check connections. If correct, click on 'Show output voltage' button to view output on DMM.
- Calculate the inverting bias current using the formula: IB1 = Vo/Rf =0.024/470k =**0.0510uA**
- Click on 'Result' button and enter the calculated value.
- Click on 'Reset' button and proceed in the same way to calculate the input bias current at non-inverting terminal.

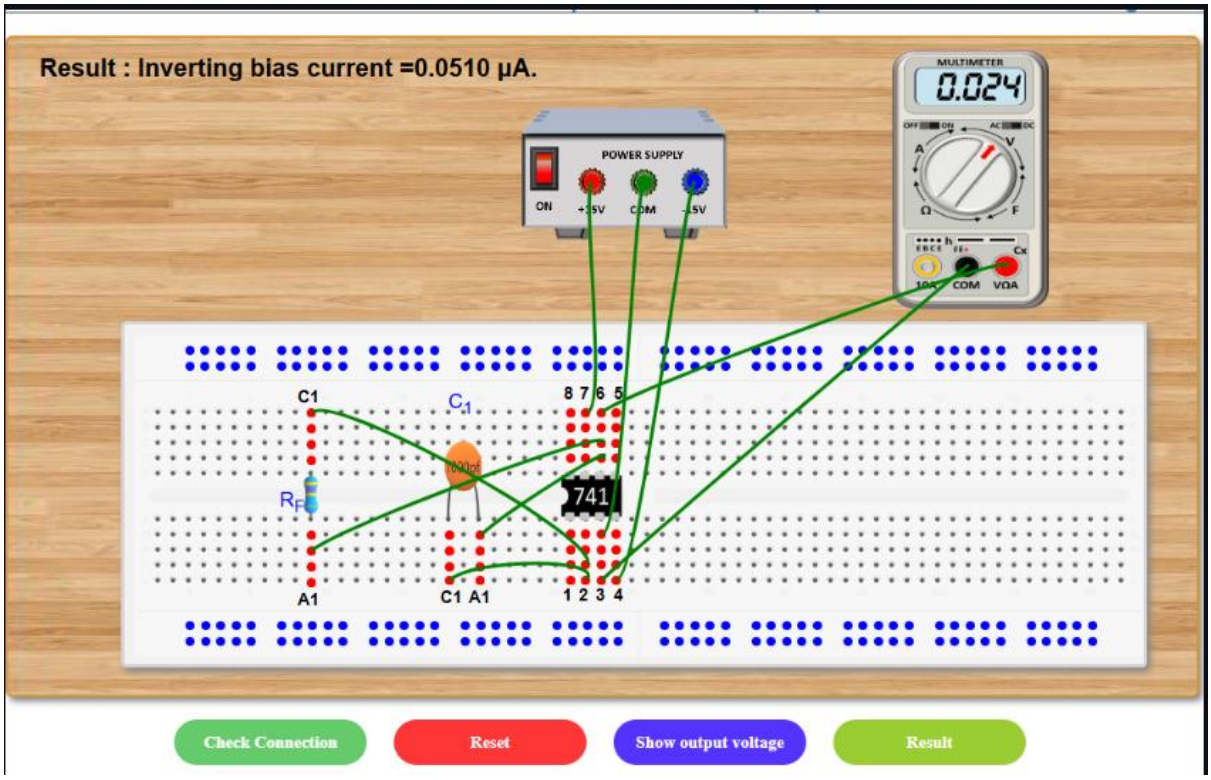

Measurement of non-inverting bias current IB2

Circuit Diagram:

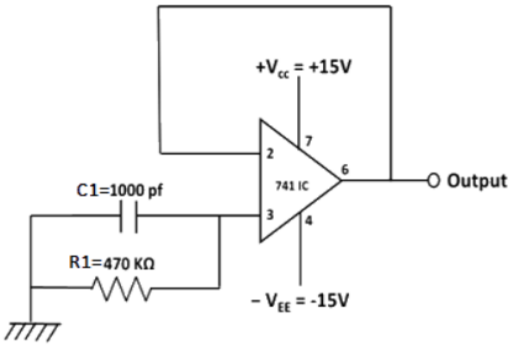

Fig. 1 Circuit Diagram

STEPS:

- Click on the component button to place the component on the table.
- Make connections as per the circuit diagram.
- Click on 'Check Connection' button to check connections. If correct, Click on 'Show output voltage' button to view output on DMM.
- Calculate the non-inverting bias current using the formula: IB2 = Vo/R1 =0.02/470k = **0.042 uA**
- Click on 'Result' button and enter the claculated value.
- The input bias current IB hence, can be calculated using the formula: IB = (IB1 + IB2)/2(where, IB1 has to be calculated from previous part) = (0.05*10^-6+0.004*210^-6)/2= **0.046uA**

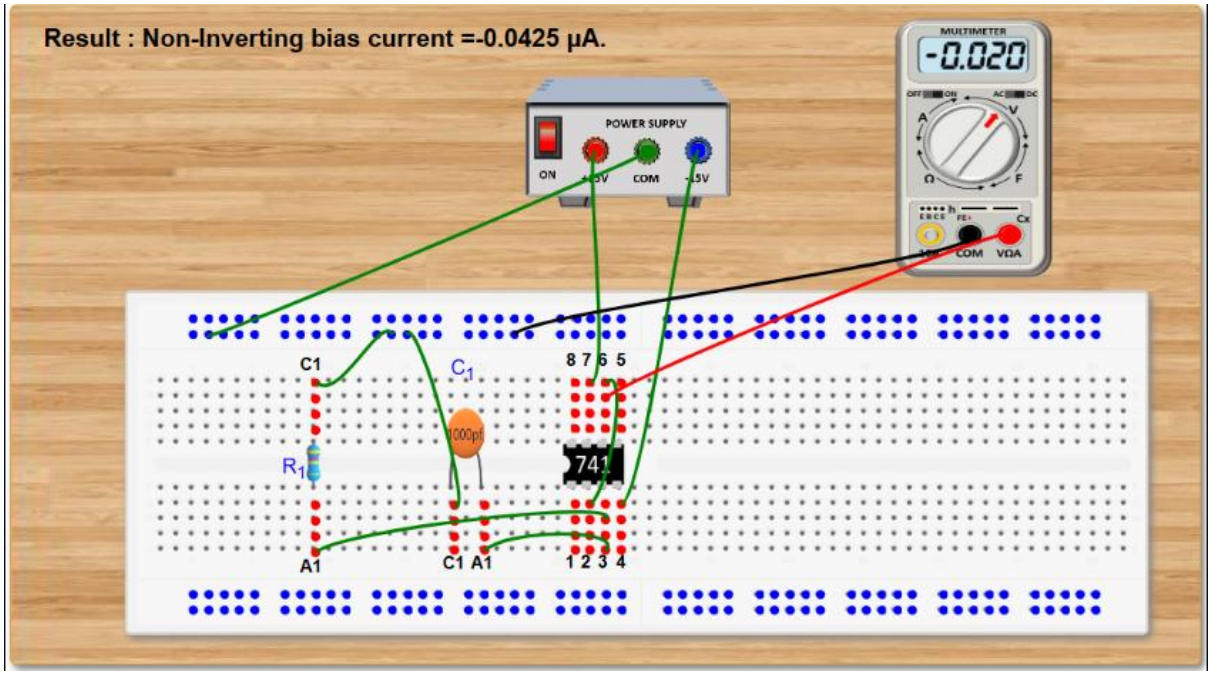

Measurement of input offset current

Circuit Diagram:

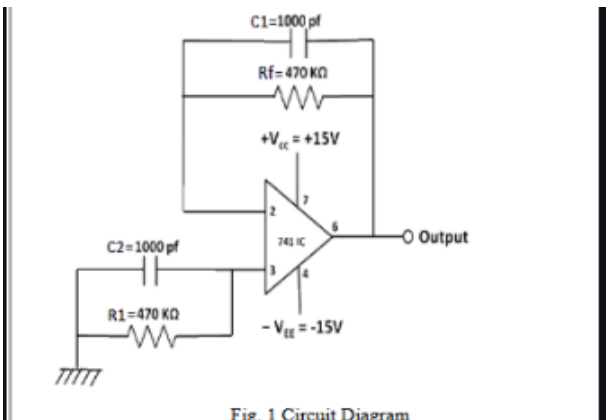

Fig. 1 Circuit Diagram

STEPS:

- Make connections as per the circuit diagram.
- Click on 'Check Connection button to check connections. If correct, Click on 'Show output voltage' button to view output on DMM.
- Calculate the input offset current using the formula: Iio = Vo/Rf = 0.003/470k=**0.0063uA**
- Click on 'Result' button and enter the calculated value.

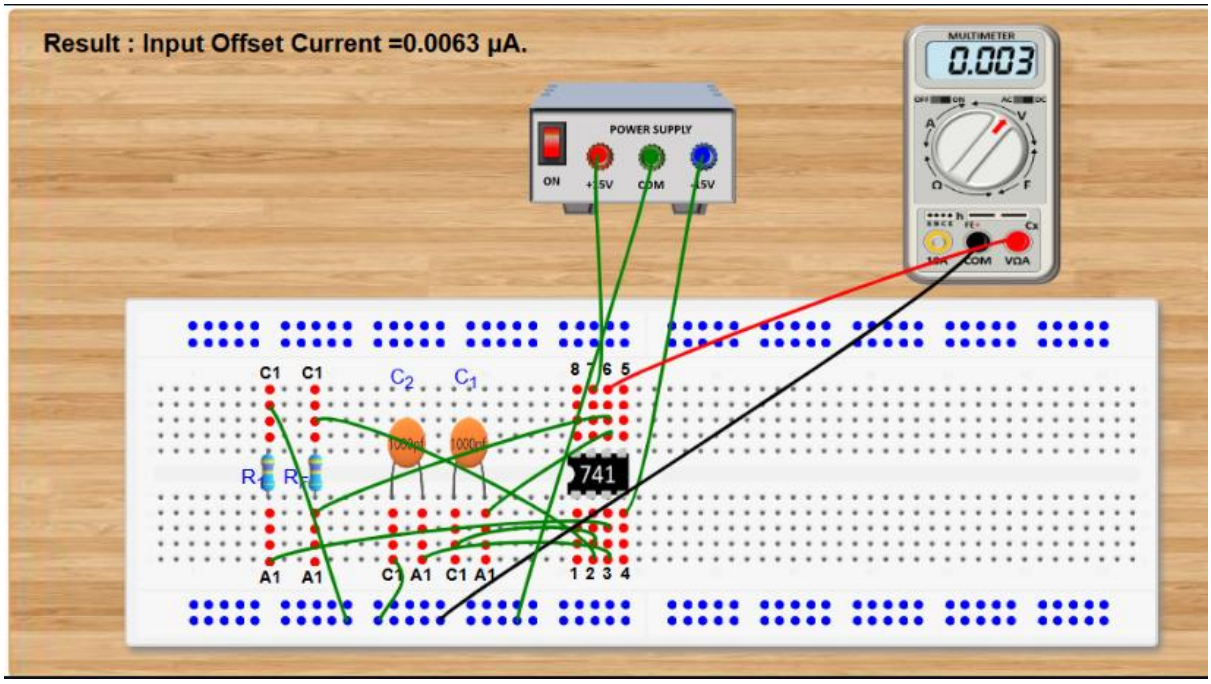

Measurement of input offset voltage

Circuit Diagram:

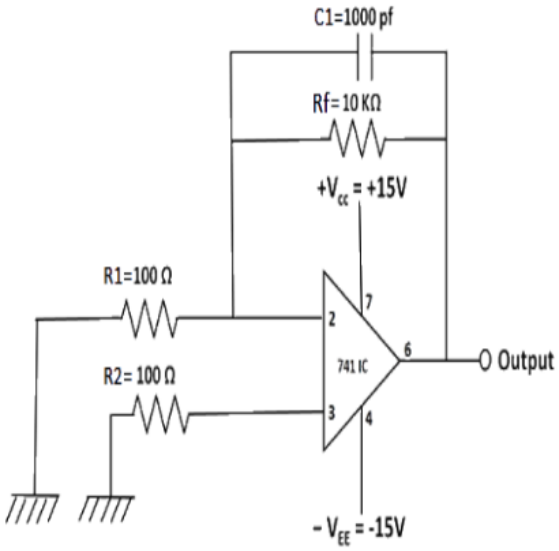

Fig. 1 Circuit Diagram

STEPS

- Make connections as per the circuit diagram.
- Click on 'Check Connection' button to check connections. If correct, Click on 'Show output voltage' button to view output (Vo) on DMM.
- Calculate the input offset voltage, Vio using the formula: Vio = (Vo - IioRf)/(1+Rf/Ri) =1.048mV
- Click on 'Result' button and enter the calculated value.

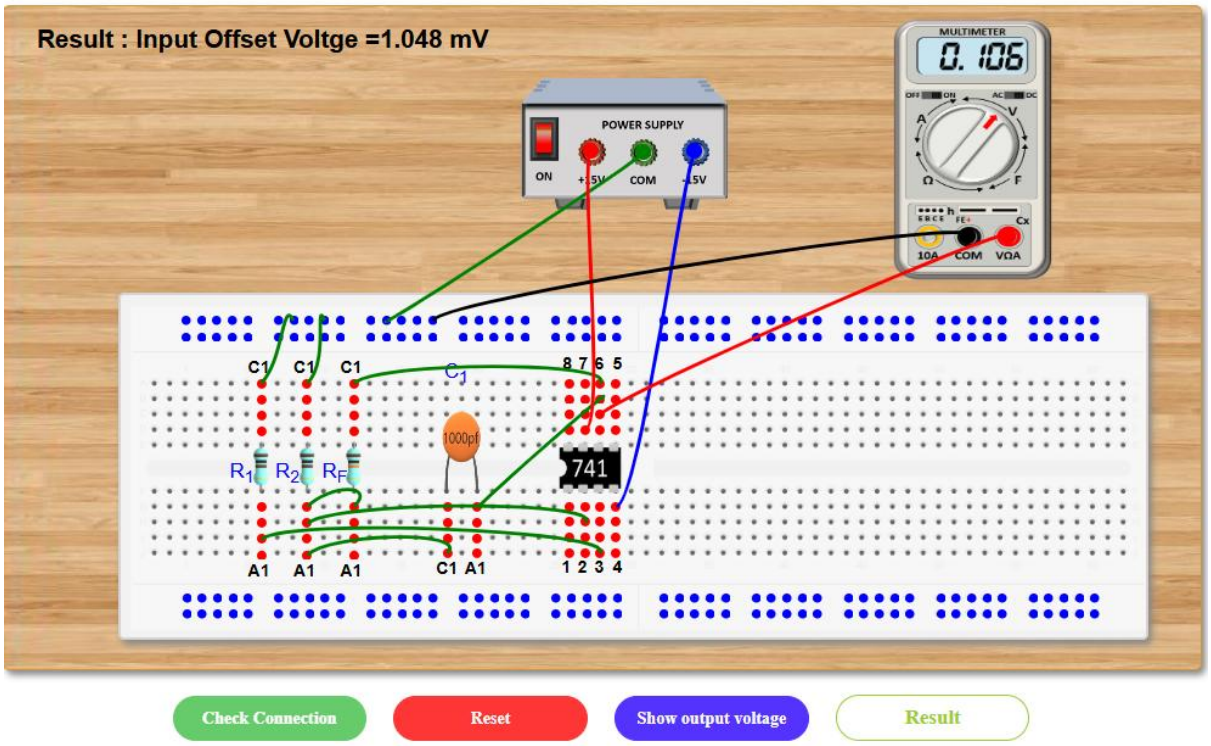

Check Connection | Reset | Show output voltage | Result

Measurement of slew rate

Circuit Diagram:

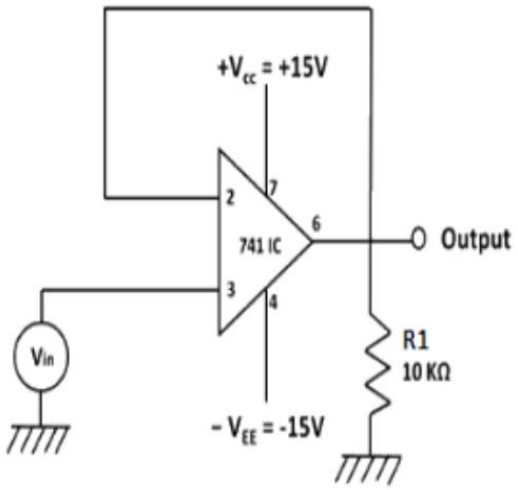

Fig. 1 Circuit Diagram

STEPS

- Make connections as per the circuit diagram.
- The input signal* has to be taken from the red terminal of A.F. Oscillator while the other terminal has to be grounded.
- Also, feed the input signal to channel CH1 of the C.R.O and the output from Op-Amp IC must be fed to the channel CH2.
- Click on 'Check Connection' button to check connections. If correct, Click on 'Show output voltage' button to view output.
- Increase the frequency of input signal using the dial** on A.F. Oscillator until output wave becomes triangular. This is the required frequency fmax in KHz.
- Calculate the slew rate using the formula: S.R. = 2πfmaxVm/10^6 V/μs
- Click on 'Result' button and enter the calculated value.

S.R. = 2πfmaxVm/10^6 V/μs

= 2*3.14*25*3=0.471 V/μs

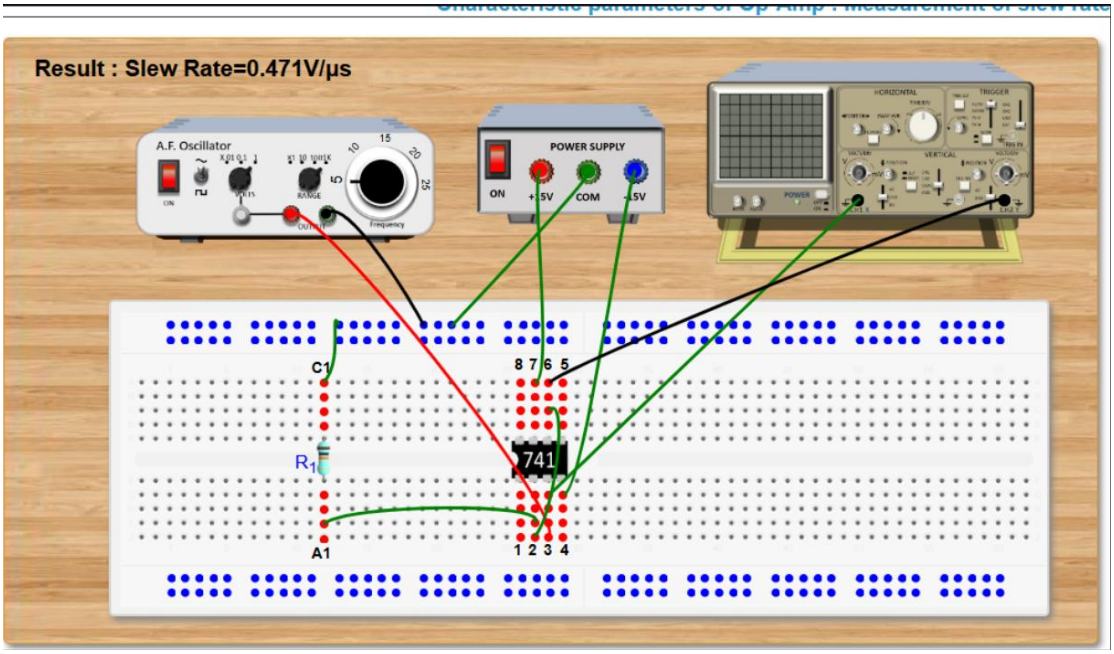

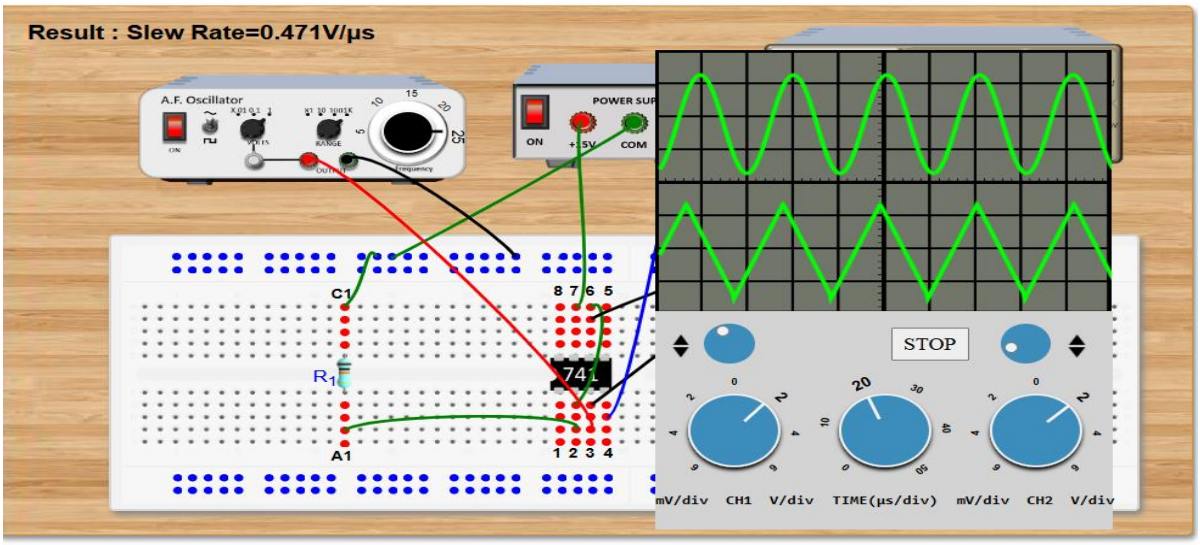

The image demonstrates a classic electronics concept called **slew rate limiting** using a 741 Operational Amplifier (op-amp).

- **Top Graph (Green Sine Wave):** This is the input signal from the A.F. Oscillator. It is a high-frequency sine wave.
- **Bottom Graph (Green Triangle Wave):** This is the output signal from the 741 op-amp.

Result:

SNO	Parameter	Value
01	Inverting bias current	0.0510uA
02	non-inverting bias current	0.046uA
03	input offset current	0.0063uA
04	input offset voltage	1.048mV
05	slew rate	0.471 V/μs

Conclusion:

The objective of this experiment to study the practical parameters of the IC-741 op-amp was successfully met. We quantified the op-amp's deviation from ideal behaviour by measuring key DC characteristics: input bias currents (IB-, IB+), input offset current (IOS), and input offset voltage (VOS). These results highlighted the necessity of accounting for internal component mismatches and biasing requirements to prevent DC errors in high-gain applications. Additionally, we evaluated the op-amp's AC performance limits by measuring its slew rate (e.g., 0.471 V/ μs), demonstrating how internal capacitance restricts the maximum rate of change of the output voltage and causes distortion at high frequencies. Understanding these specific 741 characteristics is essential for robust analog circuit design.